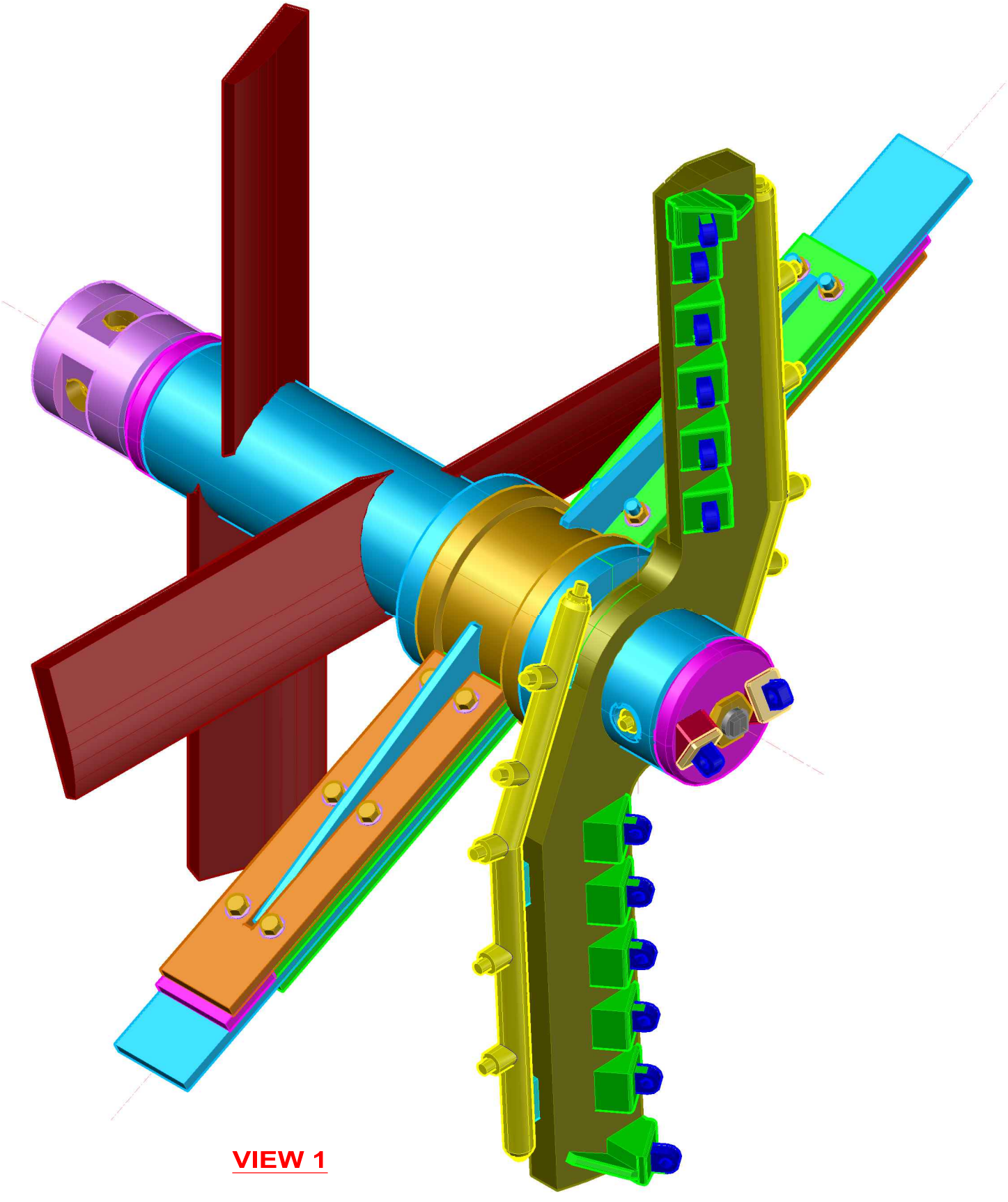

VIEW 1