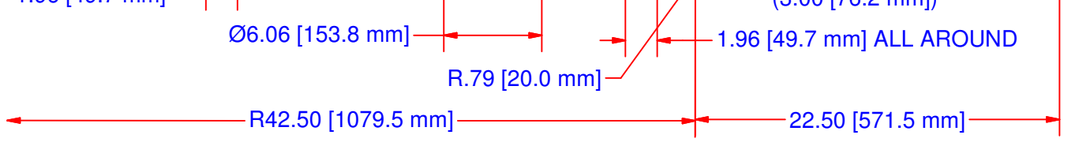
Ø6.06 [153.8 mm]
R.79 [20.0 mm]
1.96 [49.7 mm] ALL AROUND
R42.50 [1079.5 mm]
22.50 [571.5 mm]

SECTION A-A

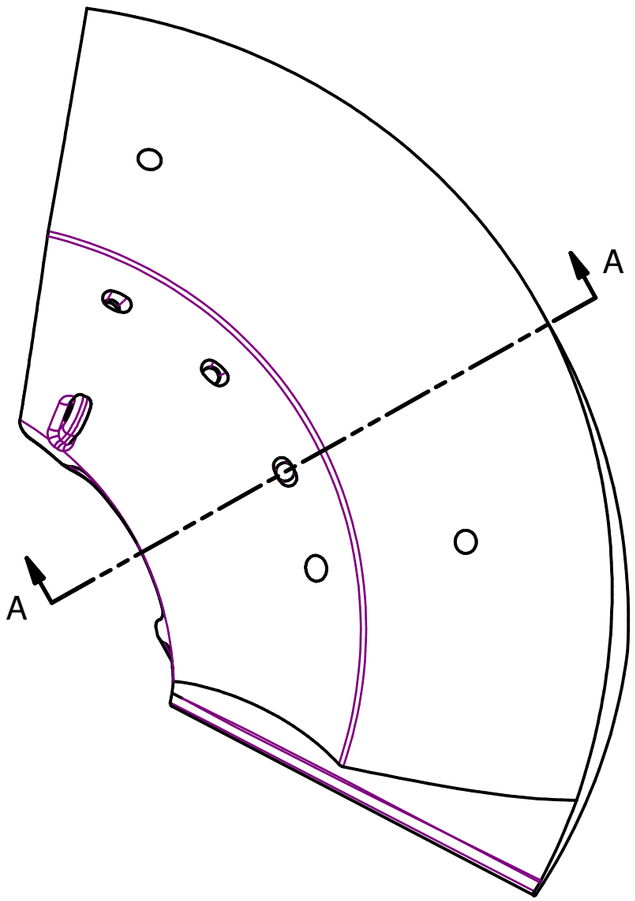
A
A

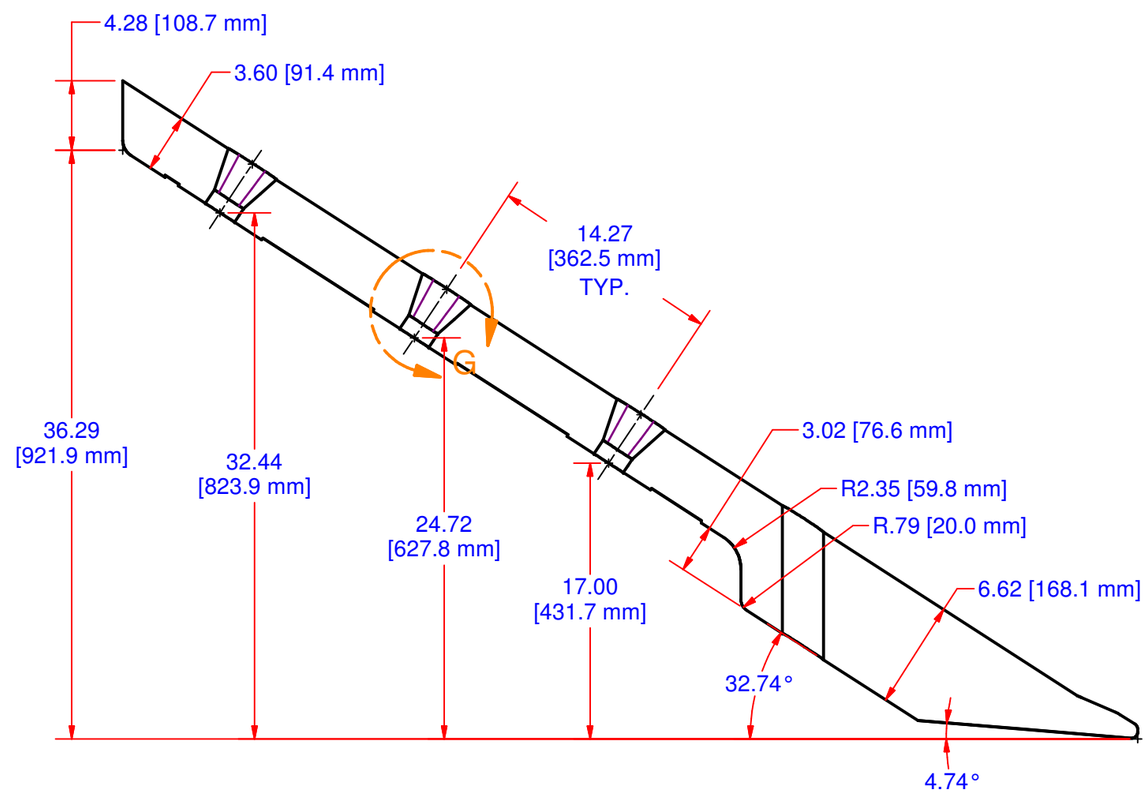
4.28 [108.7 mm]
3.60 [91.4 mm]
14.27
[362.5 mm]
TYP.
G
36.29
[921.9 mm]
32.44
[823.9 mm]
24.72
[627.8 mm]
17.00
[431.7 mm]
3.02 [76.6 mm]
R2.35 [59.8 mm]
R.79 [20.0 mm]
6.62 [168.1 mm]
32.74°
4.74°

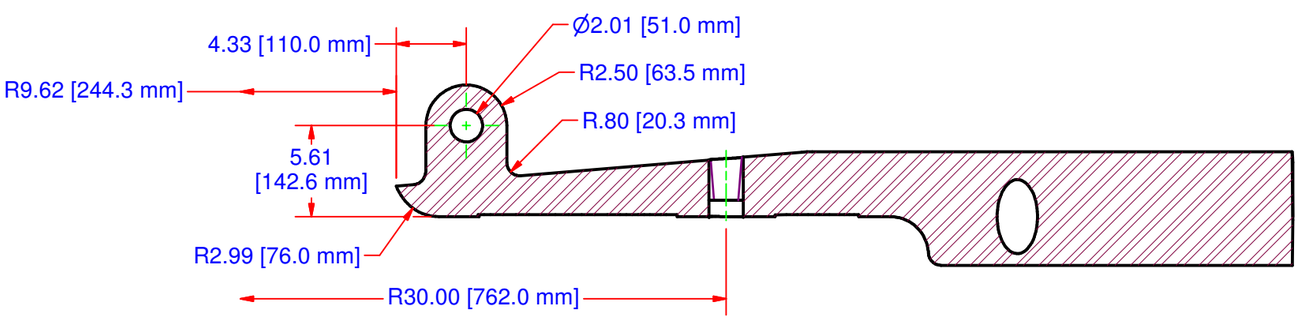
4.33 [110.0 mm]
Ø2.01 [51.0 mm]
R9.62 [244.3 mm]
R2.50 [63.5 mm]
R.80 [20.3 mm]
5.61
[142.6 mm]
R2.99 [76.0 mm]
R30.00 [762.0 mm]

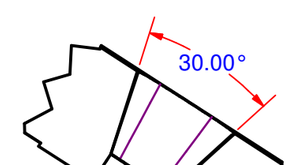
30.00°