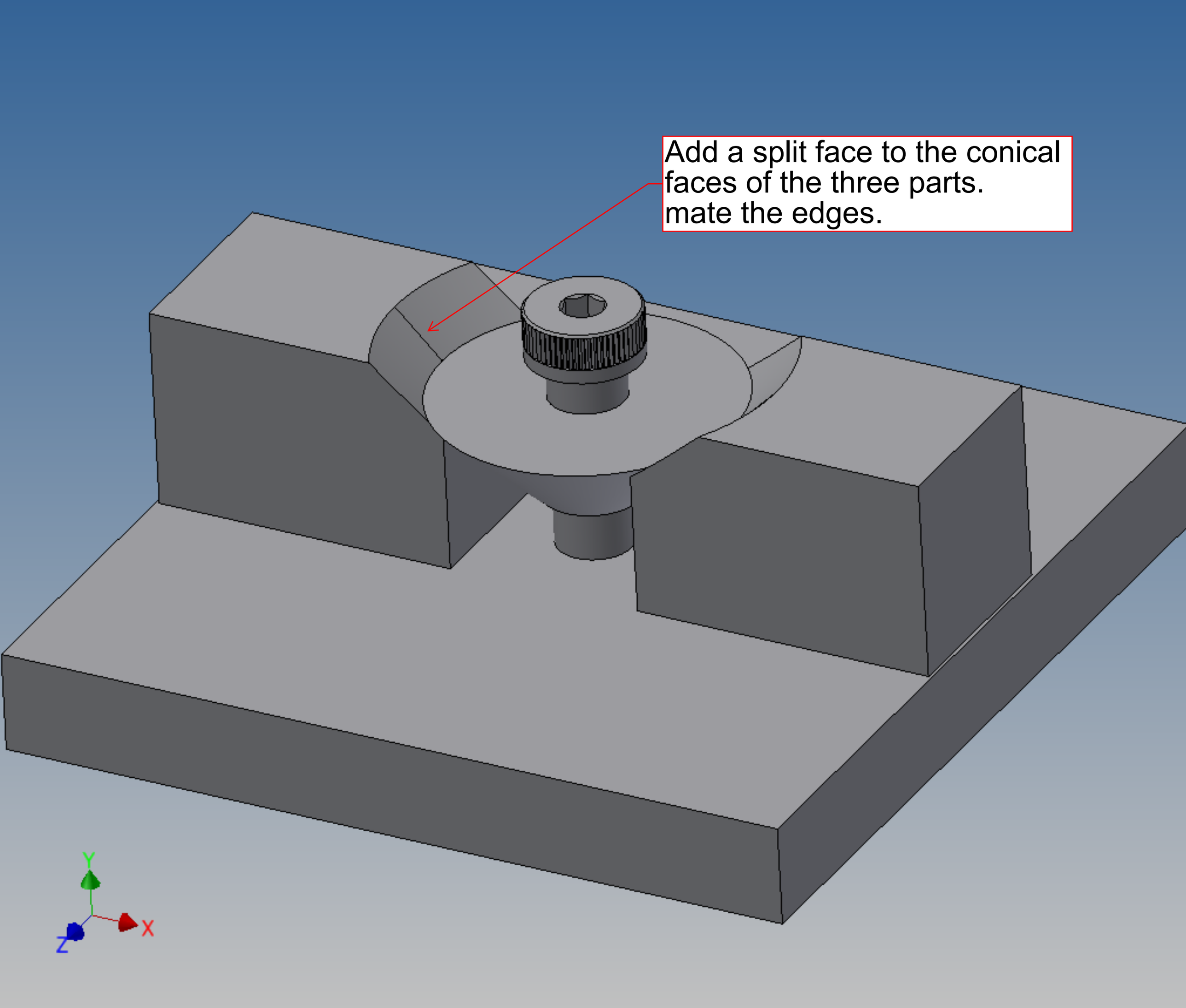
Add a split face to the conical faces of the three parts.
mate the edges.
Y
X
Z