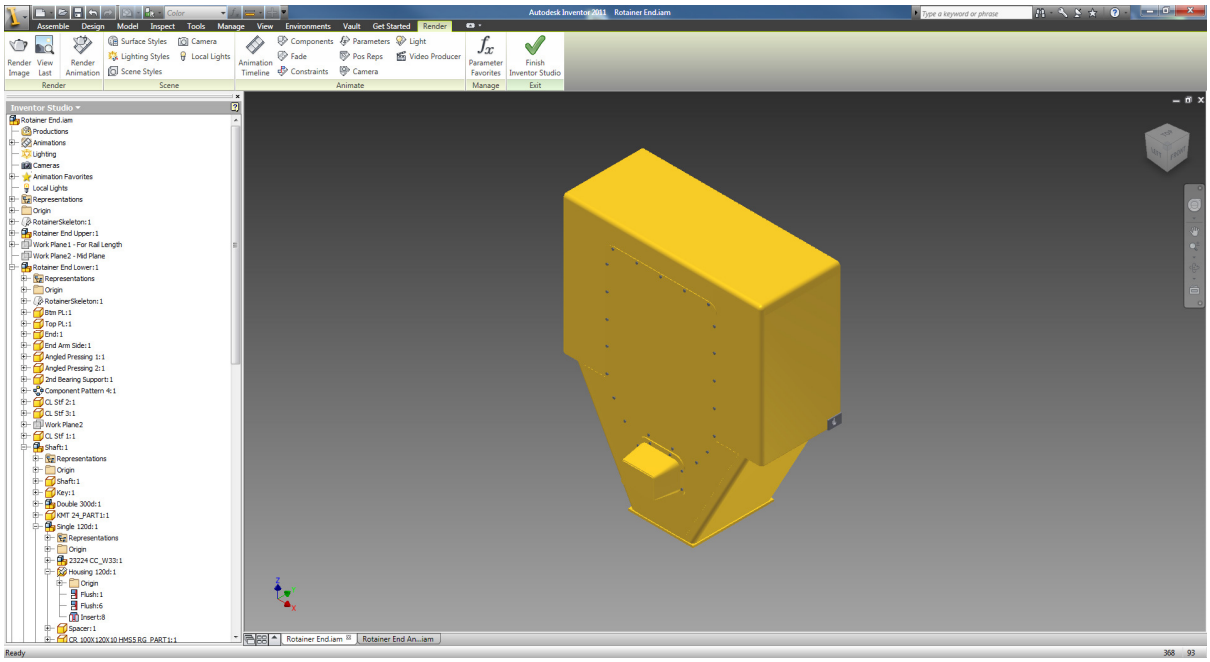
Autodesk Inventor 2011 Rotainer End.iam
Assemble Design Model Inspect Tools Manage View Environments Vault Get Started Render
Render Image
View Last
Render Animation
Surface Styles
Lighting Styles
Scene Styles
Camera
Local Lights
Animation Timeline
Components
Fade
Constraints
Parameters
Pos Reps
Camera
Light
Video Producer
Parameter Favorites
Finish Inventor Studio
Render
Scene
Animate
Manage
Exit
Inventor Studio
Rotainer End.iam
Productions
Animations
Lighting
Cameras
Animation Favorites
Local Lights
Representations
Origin
RotainerSkeleton:1
Rotainer End Upper:1
Work Plane1 - For Rail Length
Work Plane2 - Mid Plane
Rotainer End Lower:1
Ready

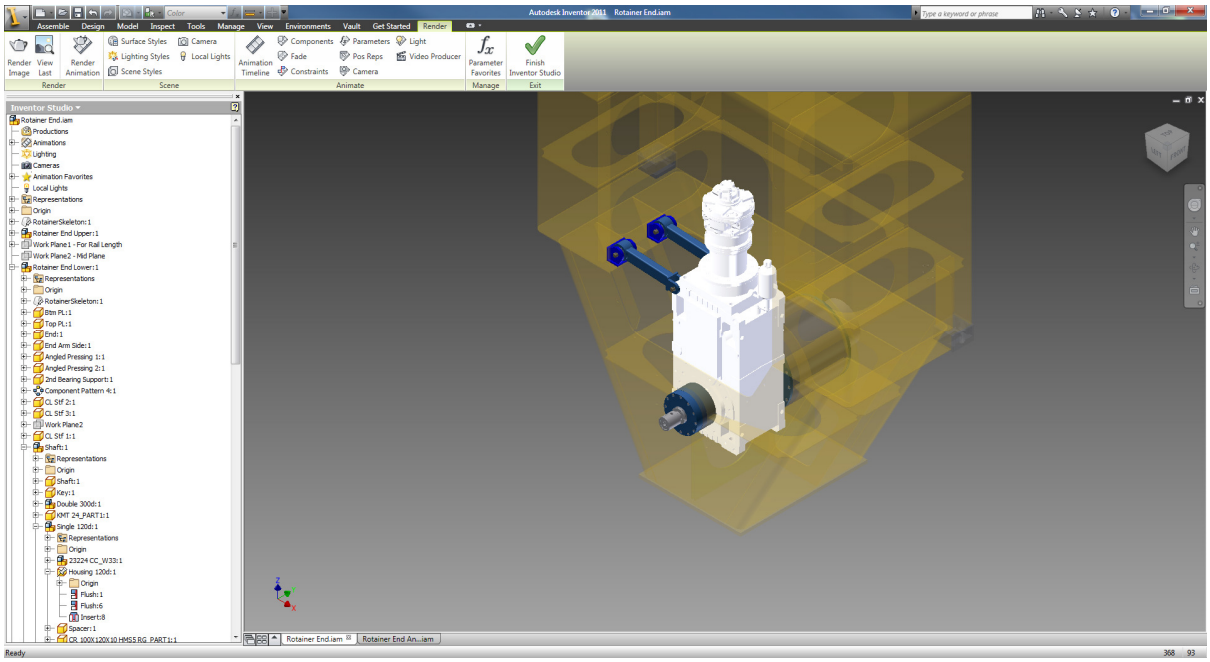
Autodesk Inventor 2011 Rotainer End.iam
Assemble Design Model Inspect Tools Manage View Environments Vault Get Started Render
Render Image
View Last
Render Animation
Surface Styles
Lighting Styles
Scene Styles
Camera
Local Lights
Animation Timeline
Components
Fade
Constraints
Parameters
Pos Reps
Camera
Light
Video Producer
Parameter Favorites
Finish Inventor Studio
Render
Scene
Animate
Manage
Exit
Inventor Studio
Rotainer End.iam
Productions
Animations
Lighting
Cameras
Animation Favorites
Local Lights
Representations
Origin
RotainerSkeleton:1
Rotainer End Upper:1
Work Plane1 - For Rail Length
Work Plane2 - Mid Plane
Rotainer End Lower:1
Ready

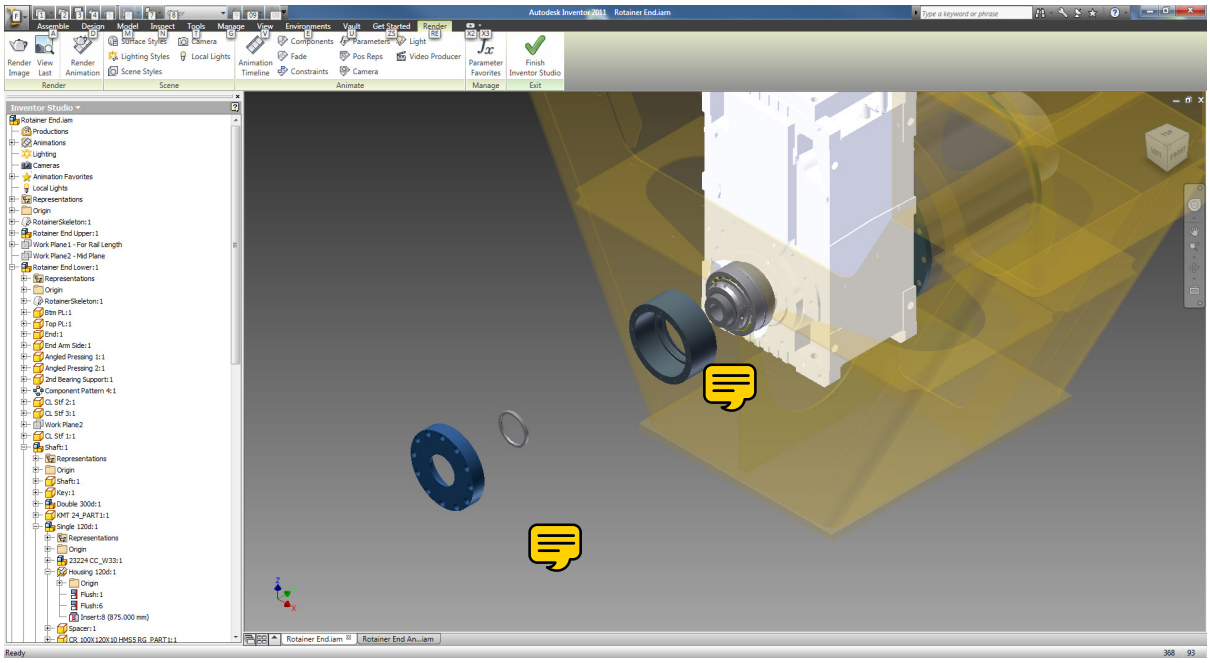
Autodesk Inventor 2011 Rotainer End.iam
Assemble
Design
Model
Inspect
Tools
Manage
View
Environments
Vault
Get Started
Render
Render Image
View Last
Render Animation
Surface Styles
Lighting Styles
Scene Styles
Camera
Local Lights
Animation Timeline
Components
Fade
Constraints
Parameters
Pos Reps
Camera
Light
Video Producer
Parameter Favorites
Finish Inventor Studio
Render
Scene
Animate
Manage
Exit
Inventor Studio
Rotainer End.iam
Productions
Animations
Lighting
Cameras
Animation Favorites
Local Lights
Representations
Origin
RotainerSkeleton:1
Rotainer End Upper:1
Work Plane1 - For Rail Length
Work Plane2 - Mid Plane
Rotainer End Lower:1
Representations
Origin
RotainerSkeleton:1
Btm PL:1
Top PL:1
End:1
End Arm Side:1
Angled Pressing 1:1
Angled Pressing 2:1
2nd Bearing Support:1
Component Pattern 4:1
CL Stif 2:1
CL Stif 3:1
Work Plane2
CL Stif 1:1
Shaft:1
Representations
Origin
Shaft:1
Key:1
Double 300d:1
KMT 24_PART1:1
Single 120d:1
Representations
Origin
23224 CC_W33:1
Housing 120d:1
Origin
Flush:1
Flush:6
Insert:8 (875.000 mm)
Spacer:1
CR_100X120X10 HMSS RG_PART1:1
Rotainer End.iam
Rotainer End An...iam
Ready
368
93