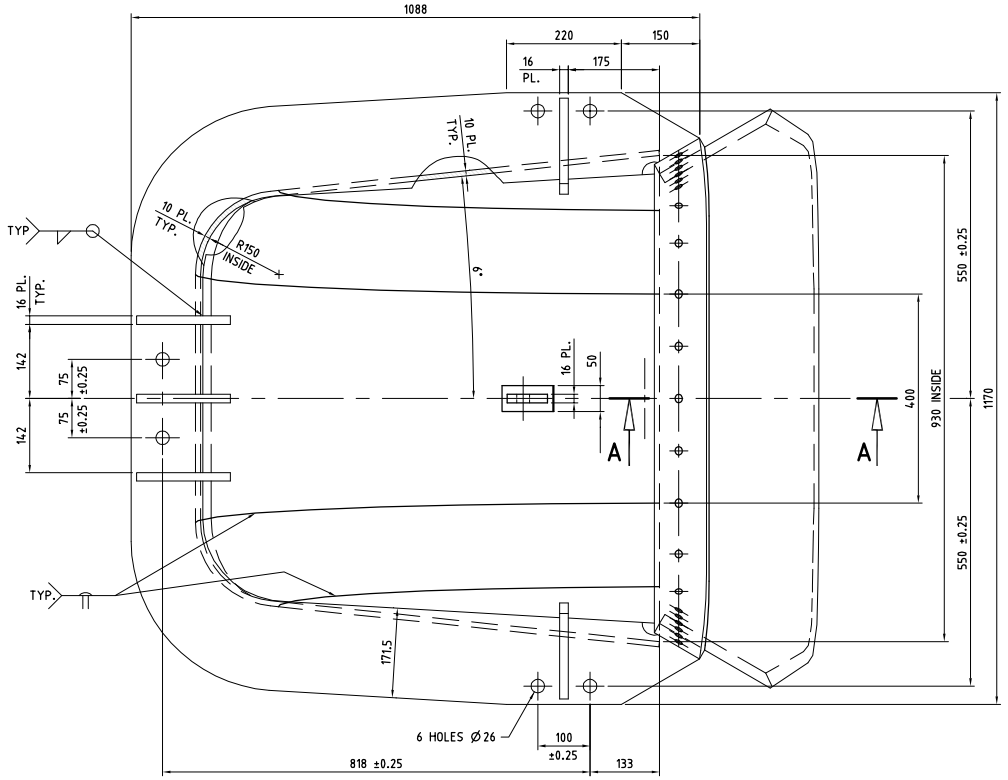

PLAN

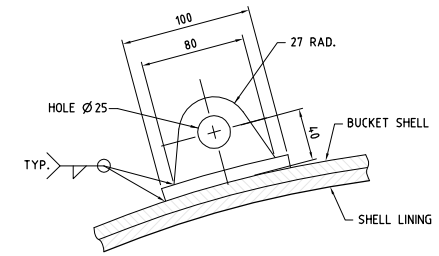

LIFTING LUG DETAIL

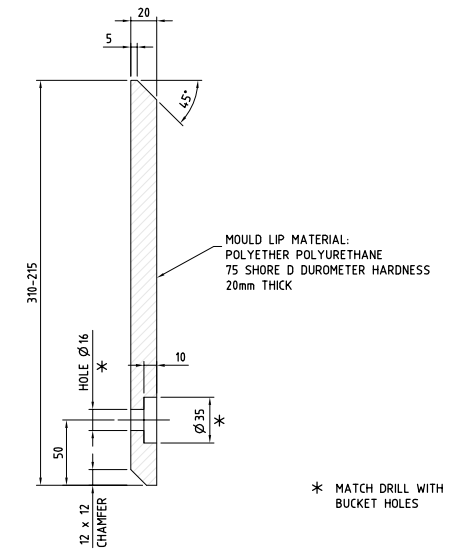

TYPICAL SECTION 'A-A'

(THROUGH MOULDED LIP)

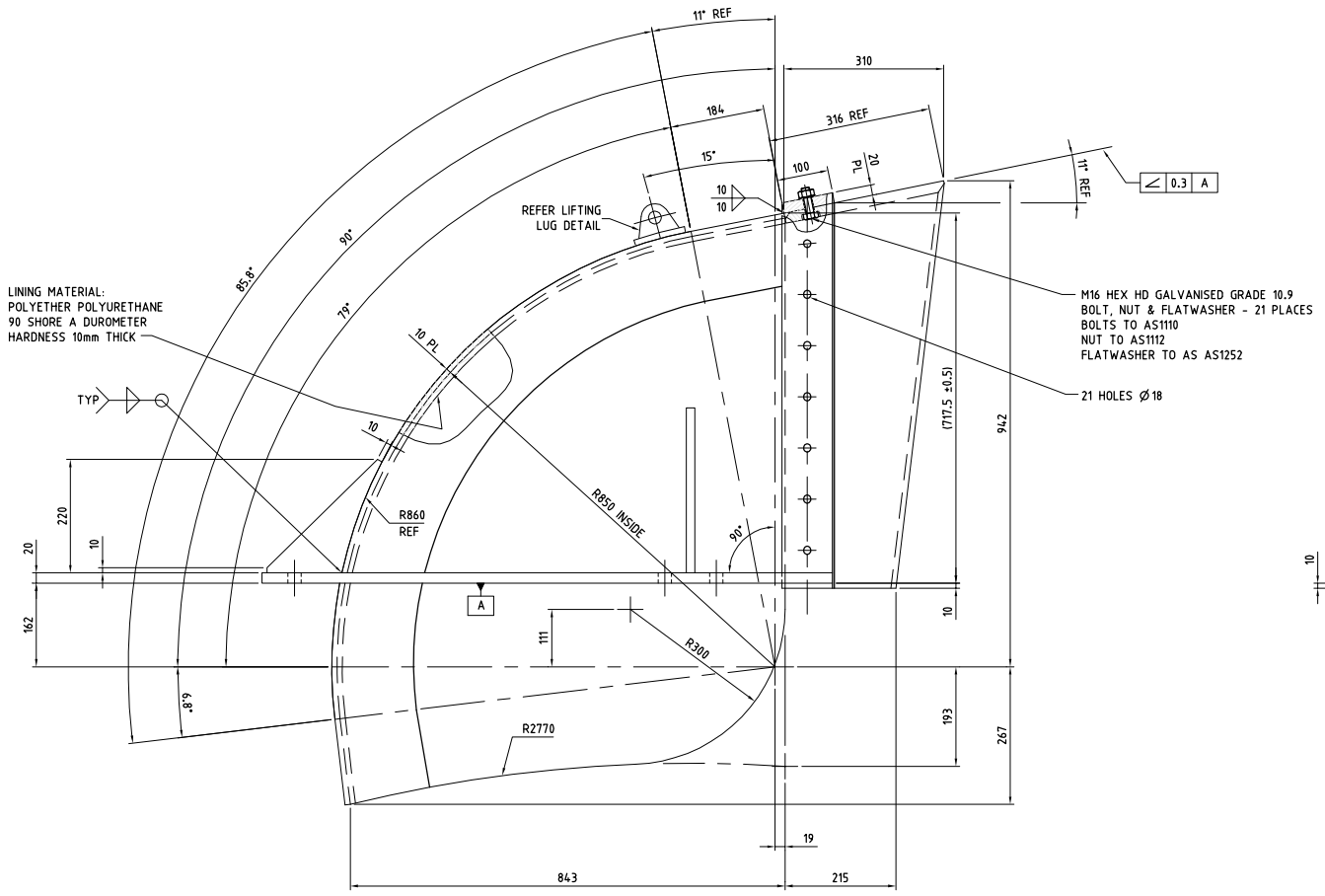

SIDE ELEVATION

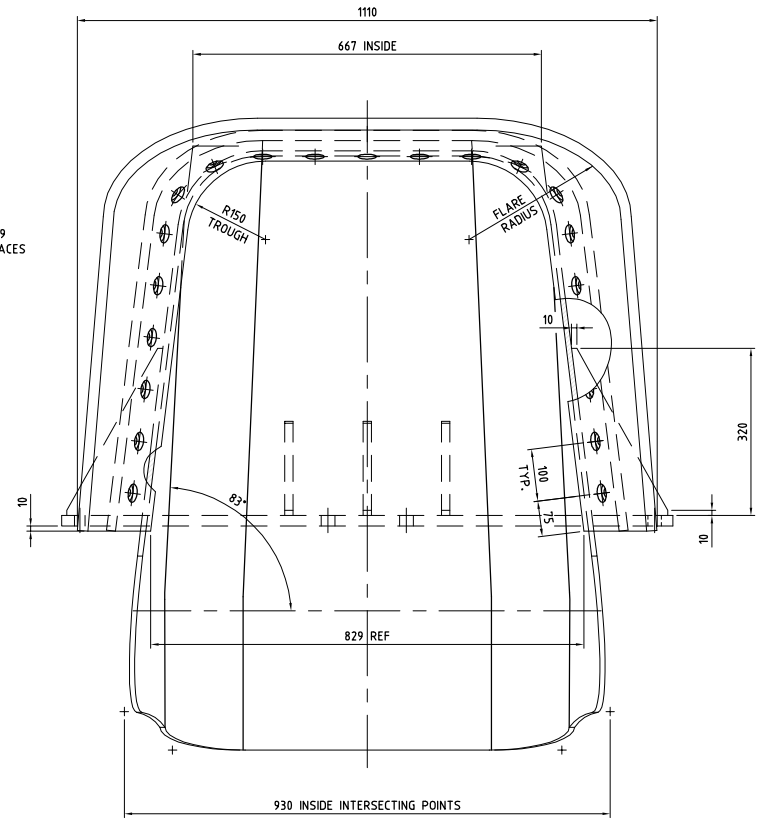

END ELEVATION

(VIEW INTO BUCKET)

NOTES:

1. DIMENSIONS ARE SYMMETRICAL ABOUT CENTRELINE
2. REFER TO DRG. CY-430-05002 FOR GENERAL NOTES
3. MATERIAL TO BE AS3678 GRADE 250 STEEL UNLESS NOTED OTHERWISE
4. TOTAL ESTIMATED MASS = 359 kgs.

NOTE: COPYRIGHT IN THIS DOCUMENT IS THE PROPERTY OF WBM PTY LTD AND IT MUST NOT BE PRODUCED OR MADE AVAILABLE FOR USE BY ANY OTHER PARTY WITHOUT EXPRESS PERMISSION OF WBM PTY LTD.

REV.	DATE	DESCRIPTION	CHECKED	APPROVED
1	15.5.98	DWG UPDATED		
0	7.4.98	APPROVED FOR CONTRACT		P.C.P.

REFERENCES	DWG. NO.
BUCKETWHEEL ASSEMBLY	CY-430-05072
GENERAL NOTES	CY-430-05002

DRAWN: R.F. / A.W.
CHECKED
DRAFTING CHECK
DESIGNED
APPROVED
MANAGER

WBM ENGINEERING AND ENVIRONMENTAL CONSULTANTS
99 King Street
Melbourne, 3000, Victoria
Telephone (03) 9614 6400
ACN 010 830 421
Also Offices in: Brisbane Denver Karratha Morwell Newcastle Sydney Vancouver

PASMINCO

CLIENT DWG. NO. CY-430-05074

WBM DWG. NO. V01617/BW/10 REV. 1

PASMINCO CENTURY PROJECT
5100 DWT SELF LOAD/UNLOAD TRANSFER VESSEL
BUCKETWHEEL & GANTRY
BUCKET DETAILS

W.B.M. ADborge - 801mm x 1148mm