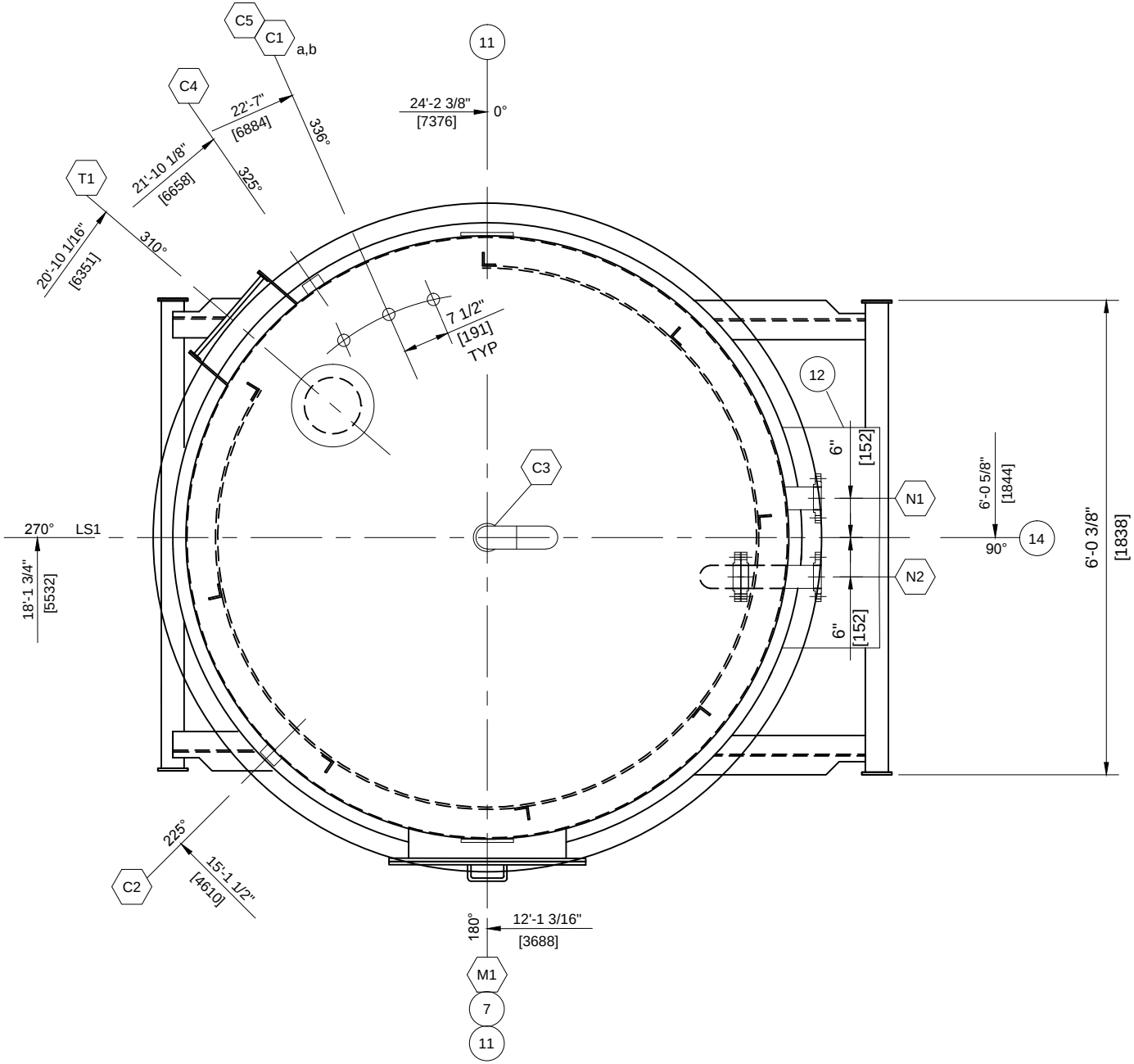
C5
C1
a,b
C4
T1
11
24'-2 3/8"
[7376]
0°
22'-7"
[6884]
21'-10 1/8"
[6658]
20'-10 1/16"
[6351]
336°
325°
310°
7 1/2"
[191]
TYP
12
6"
[152]
C3
N1
N2
270°
LS1
18'-1 3/4"
[5532]
6'-0 5/8"
[1844]
90°
14
6'-0 3/8"
[1838]
225°
15'-1 1/2"
[4610]
C2
180°
12'-1 3/16"
[3688]
M1
7
11