Plant 3D 2012:
1. created and modified (length, Dimension...)
2. export SDNF

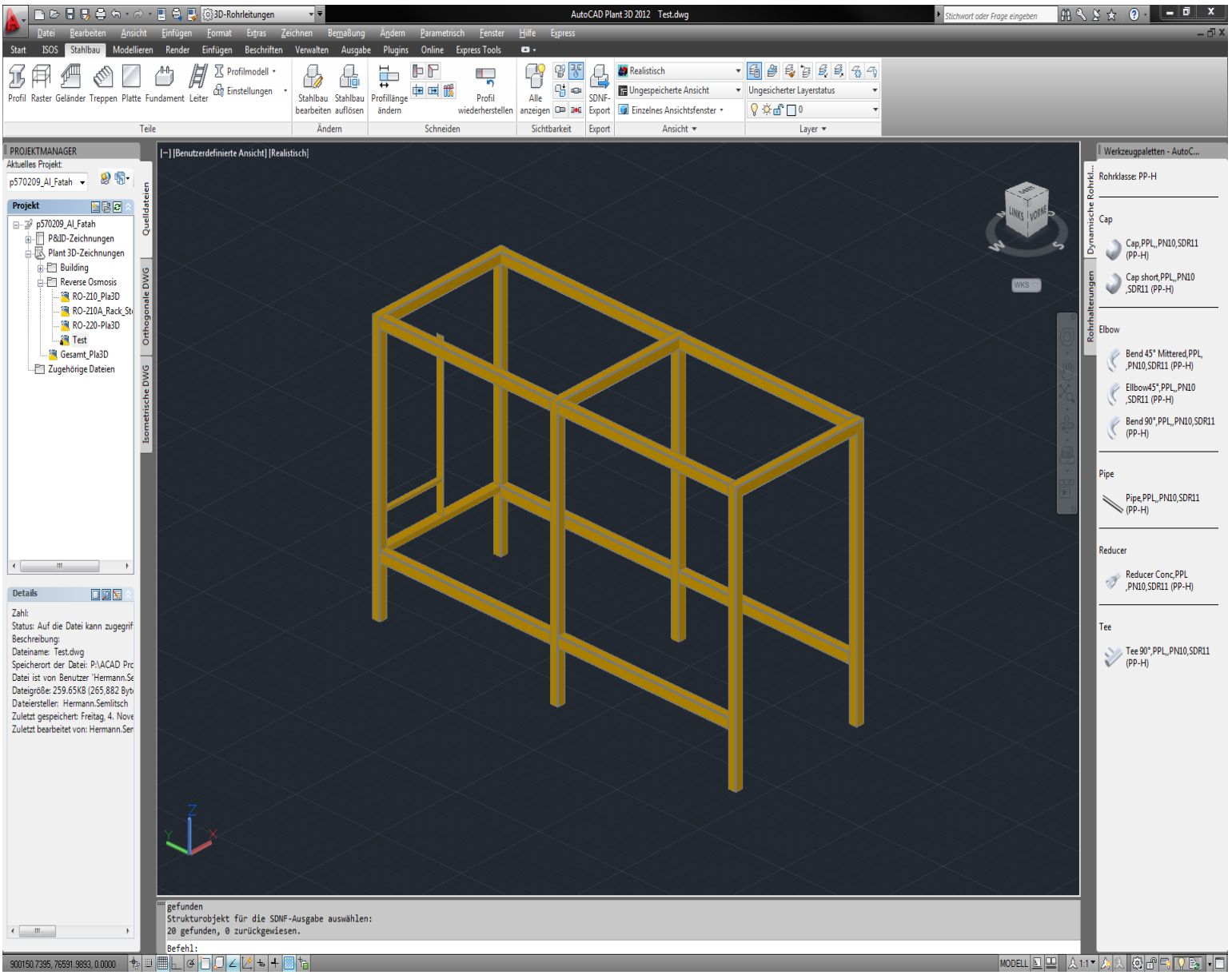
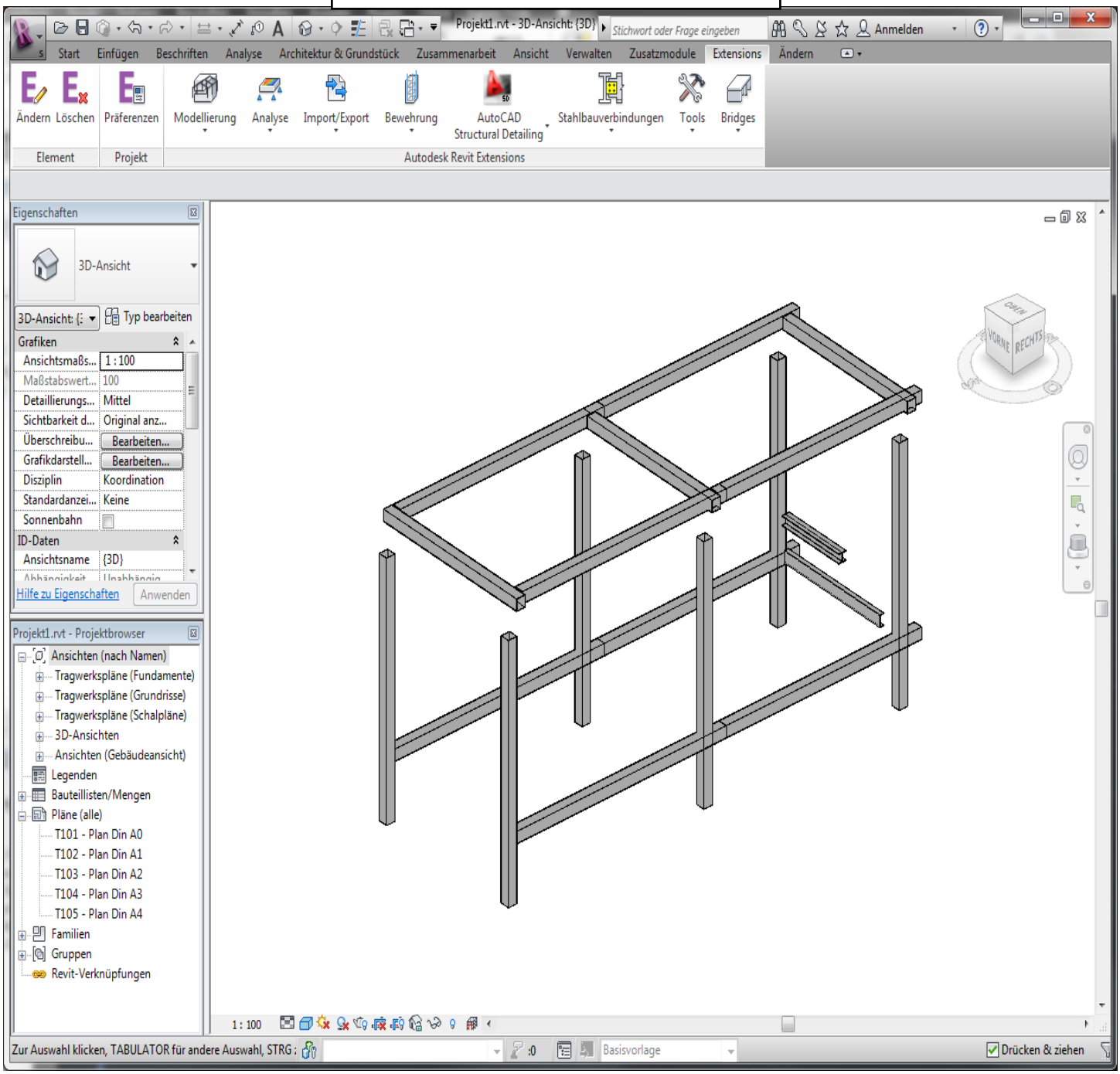
Revit 2012:
1. import SDNF
2. then it's looks so.