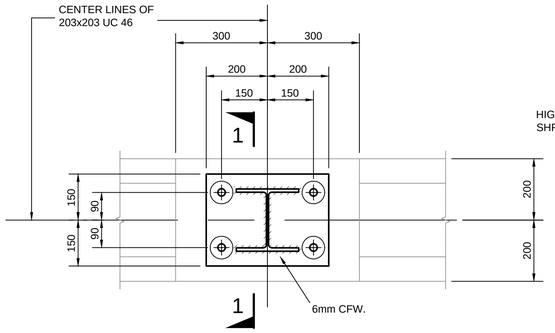

PLAN
SCALE 1:10

400 x 300 x 20mm THICK MS BASEPLATE DRILLED WITH 4No 24mm DIA HOLES FOR 4No M20 GRADE 8.8 GALVANIZED BOLTS 300mm O/A LENGTH. BOLTS ARE TO BE SET IN GALVANISED 60mm INTERNAL DIA WELL VOID TUBE ROUND PROFILE BY CFS OR SIMILAR APPROVED.

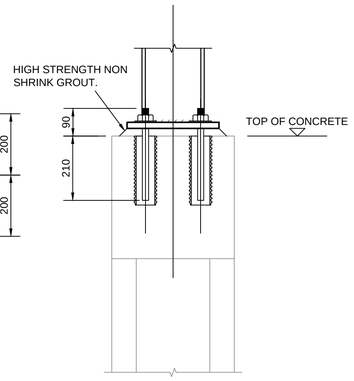

SECTION 1-1
SCALE 1:10

BASE PLATE DETAIL TYPE "A"
203x203 UC 46

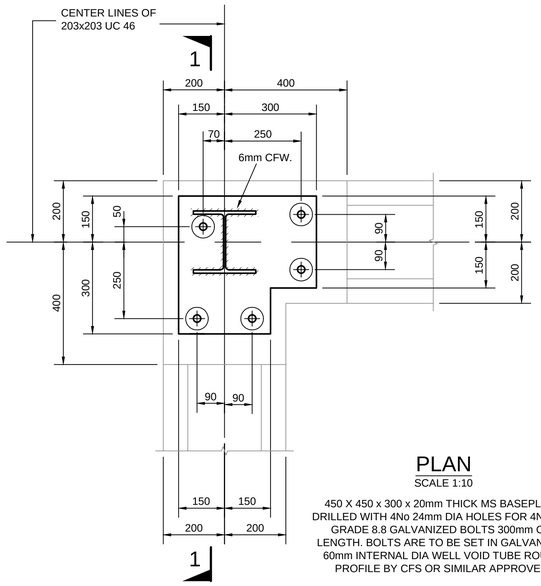

PLAN
SCALE 1:10

450 X 450 x 300 x 20mm THICK MS BASEPLATE DRILLED WITH 4No 24mm DIA HOLES FOR 4No M20 GRADE 8.8 GALVANIZED BOLTS 300mm O/A LENGTH. BOLTS ARE TO BE SET IN GALVANISED 60mm INTERNAL DIA WELL VOID TUBE ROUND PROFILE BY CFS OR SIMILAR APPROVED.

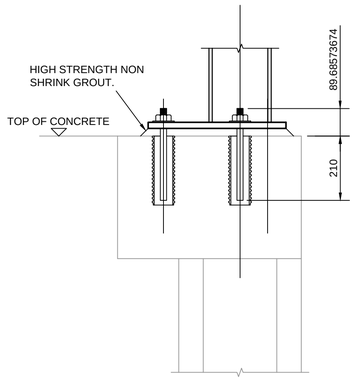

SECTION 1-1
SCALE 1:10

BASE PLATE DETAIL TYPE "B"
203x203 UC 46

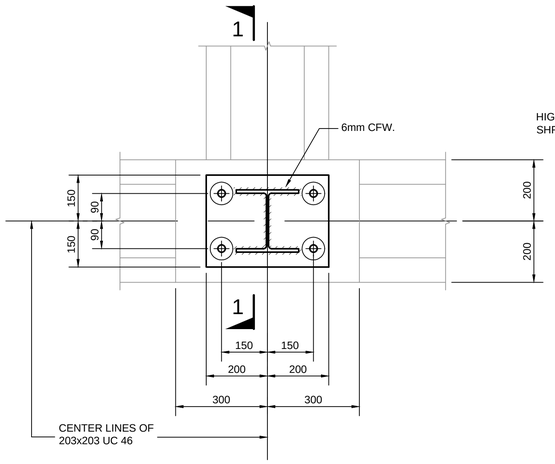

PLAN
SCALE 1:10

400 x 300 x 20mm THICK MS BASEPLATE DRILLED WITH 4No 24mm DIA HOLES FOR 4No M20 GRADE 8.8 GALVANIZED BOLTS 300mm O/A LENGTH. BOLTS ARE TO BE SET IN GALVANISED 60mm INTERNAL DIA WELL VOID TUBE ROUND PROFILE BY CFS OR SIMILAR APPROVED.

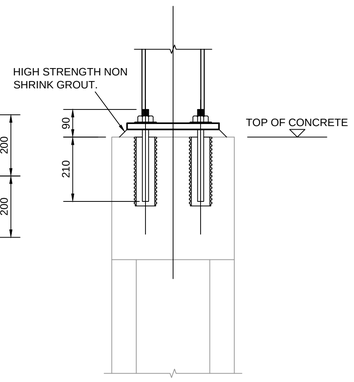

SECTION 1-1
SCALE 1:10

BASE PLATE DETAIL TYPE "C"
203x203 UC 46

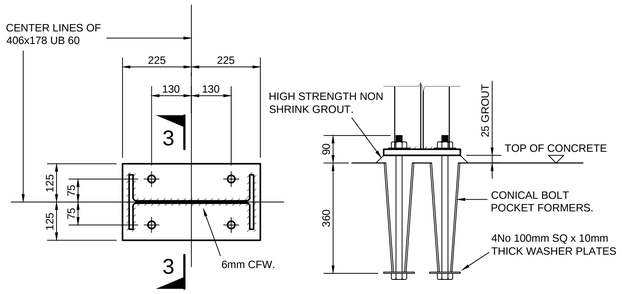

PLAN
SCALE 1:10

450 x 250 x 20mm THICK MS BASEPLATE DRILLED WITH 4No 24mm DIA HOLES FOR 4No M20 GRADE 8.8 GALVANIZED BOLTS 450mm O/A LENGTH. BOLTS ARE TO BE SUPPLIED HEXAGONAL NUTS AND WASHERS.

SECTION 3-3
SCALE 1:10

BASE PLATE DETAIL TYPE "D"
406x178 UB 60

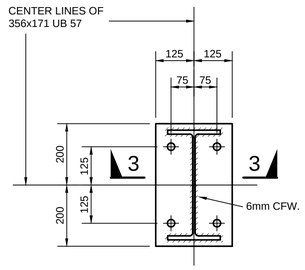

PLAN
SCALE 1:10

400 x 250 x 20mm THICK MS BASEPLATE DRILLED WITH 4No 24mm DIA HOLES FOR 4No M20 GRADE 8.8 GALVANIZED BOLTS 450mm O/A LENGTH. BOLTS ARE TO BE SUPPLIED HEXAGONAL NUTS AND WASHERS.

BASE PLATE DETAIL TYPE "E"
356x171 UB 57

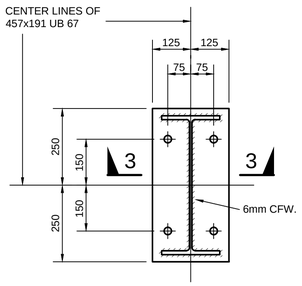

PLAN
SCALE 1:10

500 x 250 x 20mm THICK MS BASEPLATE DRILLED WITH 4No 24mm DIA HOLES FOR 4No M20 GRADE 8.8 GALVANIZED BOLTS 450mm O/A LENGTH. BOLTS ARE TO BE SUPPLIED HEXAGONAL NUTS AND WASHERS.

BASE PLATE DETAIL TYPE "F"
457x191 UB 67

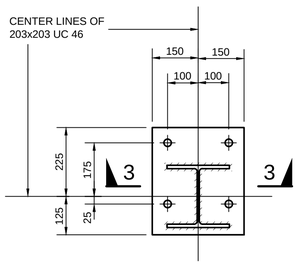

PLAN
SCALE 1:10

350 x 300 x 20mm THICK MS BASEPLATE DRILLED WITH 4No 24mm DIA HOLES FOR 4No M20 GRADE 8.8 GALVANIZED BOLTS 450mm O/A LENGTH. BOLTS ARE TO BE SUPPLIED HEXAGONAL NUTS AND WASHERS.

BASE PLATE DETAIL TYPE "G"
203x203 UC 46

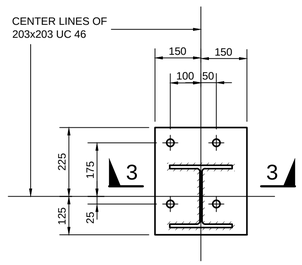

PLAN
SCALE 1:10

350 x 300 x 20mm THICK MS BASEPLATE DRILLED WITH 4No 24mm DIA HOLES FOR 4No M20 GRADE 8.8 GALVANIZED BOLTS 450mm O/A LENGTH. BOLTS ARE TO BE SUPPLIED HEXAGONAL NUTS AND WASHERS.

BASE PLATE DETAIL TYPE "H"
203x203 UC 46

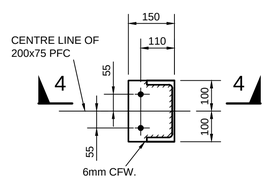

150 x 200 x 15mm THICK MS BASEPLATE DRILLED WITH 2No 18ØHOLES FOR 2No M16 HILTI HSA EXPANDING ANCHORS REF M16x215/100 OR SIMILAR APPROVED. FIXING TO BE TO MANUFACTURERS RECOMMENDATIONS.

PLAN
SCALE 1:10

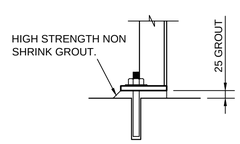

SECTION 4-4
SCALE 1:10

BASE PLATE DETAIL TYPE "J"
200x75 PFC

DO NOT SCALE - IF IN DOUBT ASK

TAMESIS JOINT VENTURE

LAING O'ROURKE

Laing O'Rourke,
Bridge Place,
Anchor Boulevard,
Admirals Park,
Dartford, Kent.
DA2 6SN.
Tel: 01322 296200
Fax: 01322 296262

Imtech
ImtechProcess
Imtech House
5 Newlands Court
Attwood Road
Burntwood
Staffordshire
WS7 3GF
Tel: 01543 496600
Fax: 01543 496601

Hyder
Hyder Consulting (UK) Limited
HCL House St Mellons Business Park
Fortran Road, St Mellons
Cardiff
CF3 0EY
Tel: 029 20926700
Fax: 029 20925222

REFERENCE DRAWINGS

NOTES

1) ALL DIMENSIONS IN MILLIMETRES UNLESS OTHERWISE NOTED.
2) ALL LEVELS ARE IN METRES AOD (NEWLYN).
3) FOR GENERAL NOTES REFER TO DRAWING 6QWG-C01-23540-CR

IMPORTANT

HEALTH, SAFETY & ENVIROMENTAL INFORMATION

IN ADDITION TO THE HAZARDS AND RISKS NORMALLY ASSOCIATED WITH THE TYPE OF WORK DETAILED ON THIS DRAWING, PLEASE NOTE THE FOLLOWING ADDITIONAL HAZARDS AND RISKS:-

HAZARD WARNINGS

- FOR MORE DETAILED INFORMATION PLEASE REFER TO THE DESIGNERS H&S HAZARD RECORD AND HEALTH AND SAFETY RISK ASSESSMENT.
- EVERYDAY OR LOW RISK HAZARDS HAVE NOT BEEN INDICATED ON THIS DRAWING, NEITHER HAVE HAZARDS THAT SHOULD BE OBVIOUS TO A COMPETENT CONTRACTOR.
- SHOULD ANY ADDITIONAL HAZARDS BE IDENTIFIED THE CONTRACTOR SHOULD NOTIFY ALL THE RELEVANT PROJECT TEAM MEMBERS.
- CONSTRUCTION WORKS WILL BE CARRIED OUT IN THE VICINITY OF EXISTING STRUCTURES (BELOW AND ABOVE GROUND) THAT WILL REMAIN LIVE DURING AND AFTER CONSTRUCTION.
- STABILITY AGAINST WIND - STEELWORK CONTRACTOR IS RESPONSIBLE FOR TEMPORARY STABILITY OF THE FRAME DURING ERECTION

Iss	Description	Designer	Checked	Approved	Date
B	FOR CONSTRUCTION - STEELWORK ONLY	CDF	IL	IL	01/03/13
A	FOR APPROVAL - STEELWORK ONLY	CDF	IL	IL	31/01/13

Thames Water

Thames Water Utilities
CAPITAL DELIVERY
Rose Kiln Court
Rose Kiln Lane, Reading. RG2 0BY

Location Code:	OS Reference:	Security Reference:	Drawn By:
CROSS1ZZ	TQ 482 807	UBR	PB

Project Group: CAPITAL DELIVERY
Sub Process:
Location / Town: CROSSNESS - ABBEY ROAD
Site Name: CROSSNESS STW
Project Name: CROSSNESS STW
Contract Name: CROSSNESS STW ENHANCED SLUDGE DIGESTION
Drawing Title: AREA 8 - CAKE STORAGE BUILDING BASEPLATE DETAILS SHEET 1

Drawing No:	Scale:	Sheet Size:	Rev:
6QWG-C01-25628-CR	1:10	A1	B

© Thames Water Utilities Ltd 2009