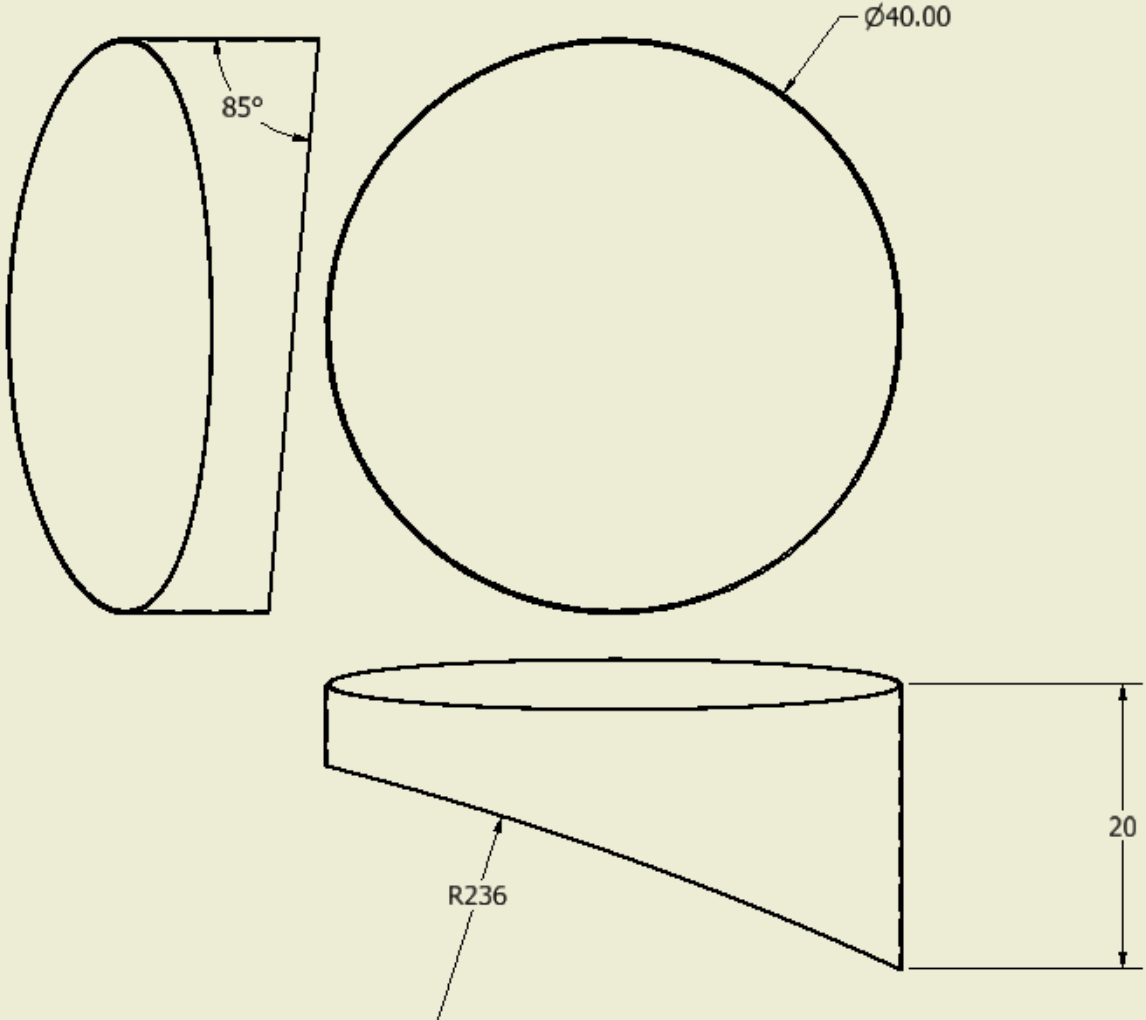
Ø40.00
85°
20
R236